GA-19RVT

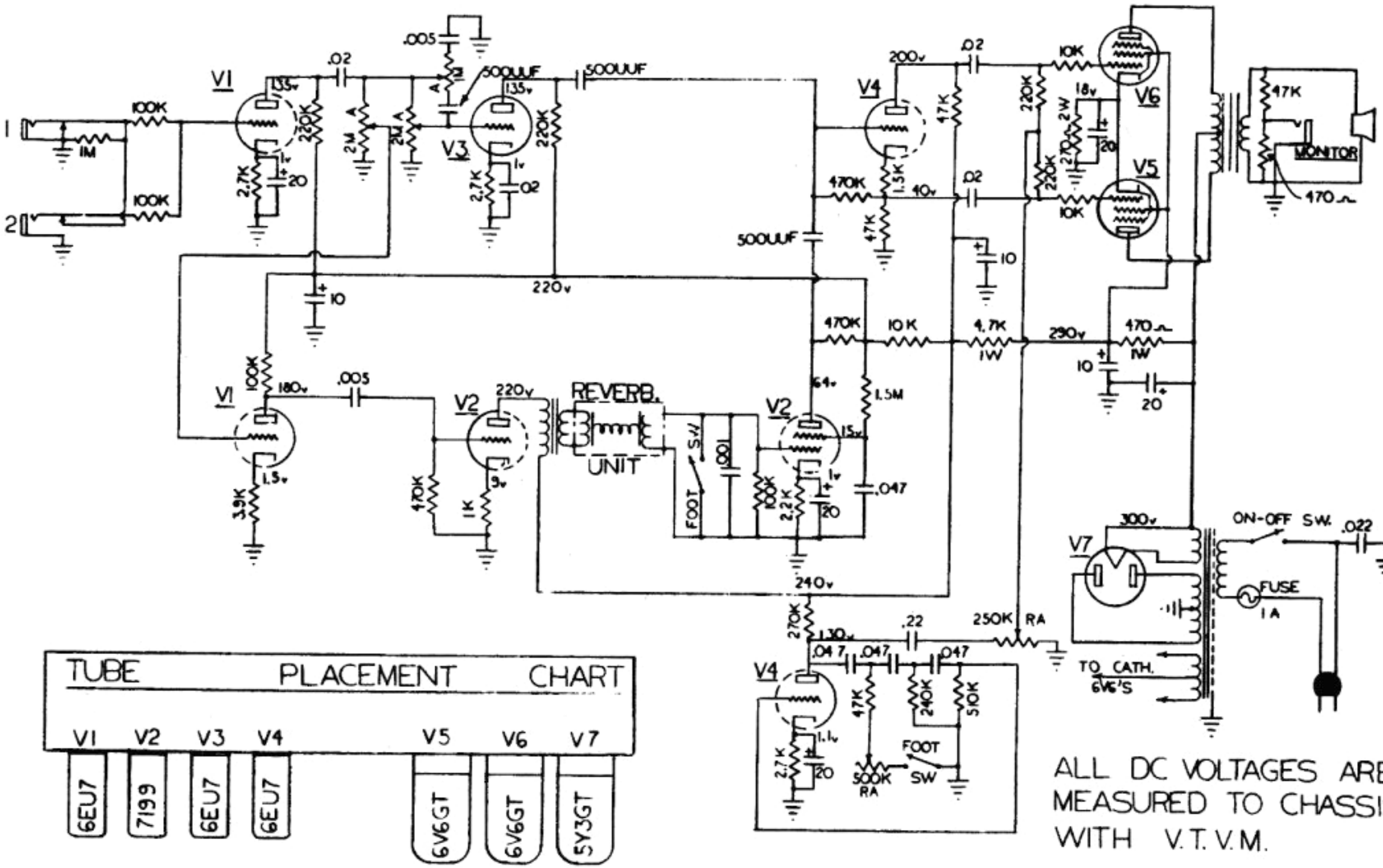

TUBE PLACEMENT CHART

V1	V2	V3	V4	V5	V6	V7
6EU7	7199	6EU7	6EU7	6V6GT	6V6GT	5Y3GT

ALL DC VOLTAGES ARE MEASURED TO CHASSIS WITH V.T.V.M.