FENDER "TREMOLUX" SCHEMATIC

MODEL 5G9

B-E1

NOTE- LATE 5E9-A MODELS ARE SIMILAR TO THIS MODEL

NOTE- ALL RESISTORS ARE ½ WATT, 10%, UNLESS SPECIFIED

NOTICE

VOLTAGES READ TO GROUND WITH ELECTRONIC VOLTMETER VALUES SHOWN + OR − 20%

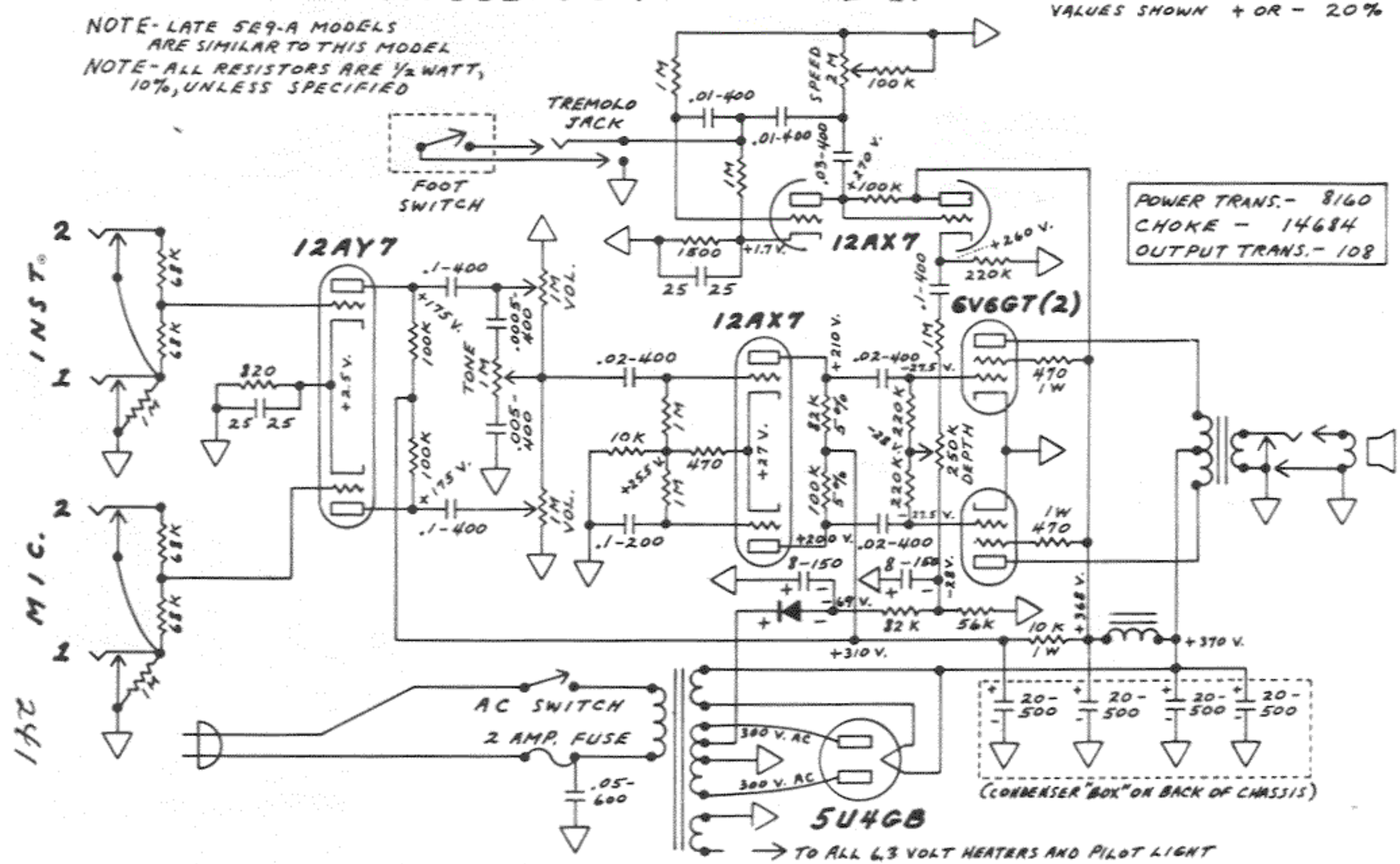

POWER TRANS.- 8160
CHOKE - 14684
OUTPUT TRANS.- 108